Vokèra

CONDEXA PRO

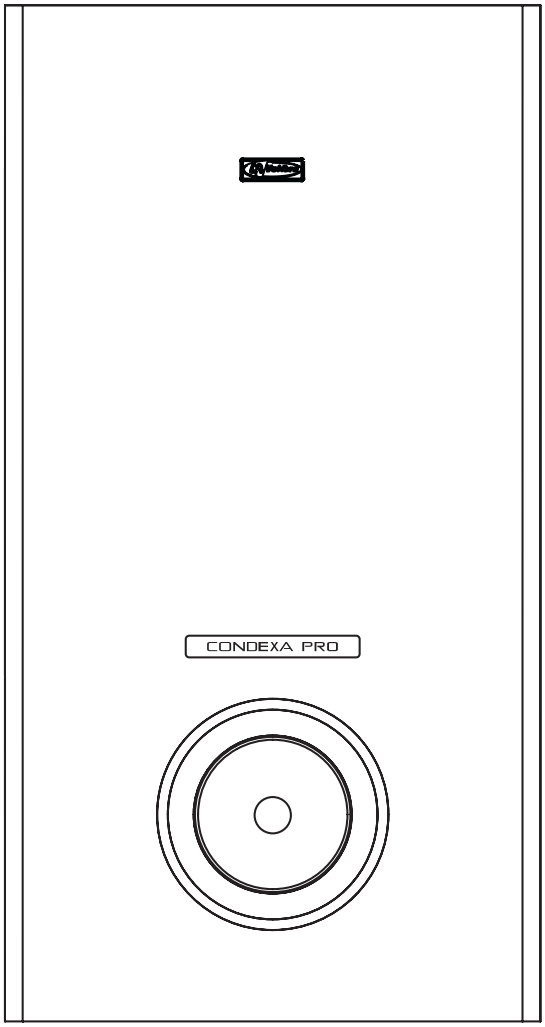

Spare parts list

CE

THESE INSTRUCTIONS
TO BE RETAINED
BY USER

benchmark™

The code of practice for the installation, commissioning & servicing of central heating systems

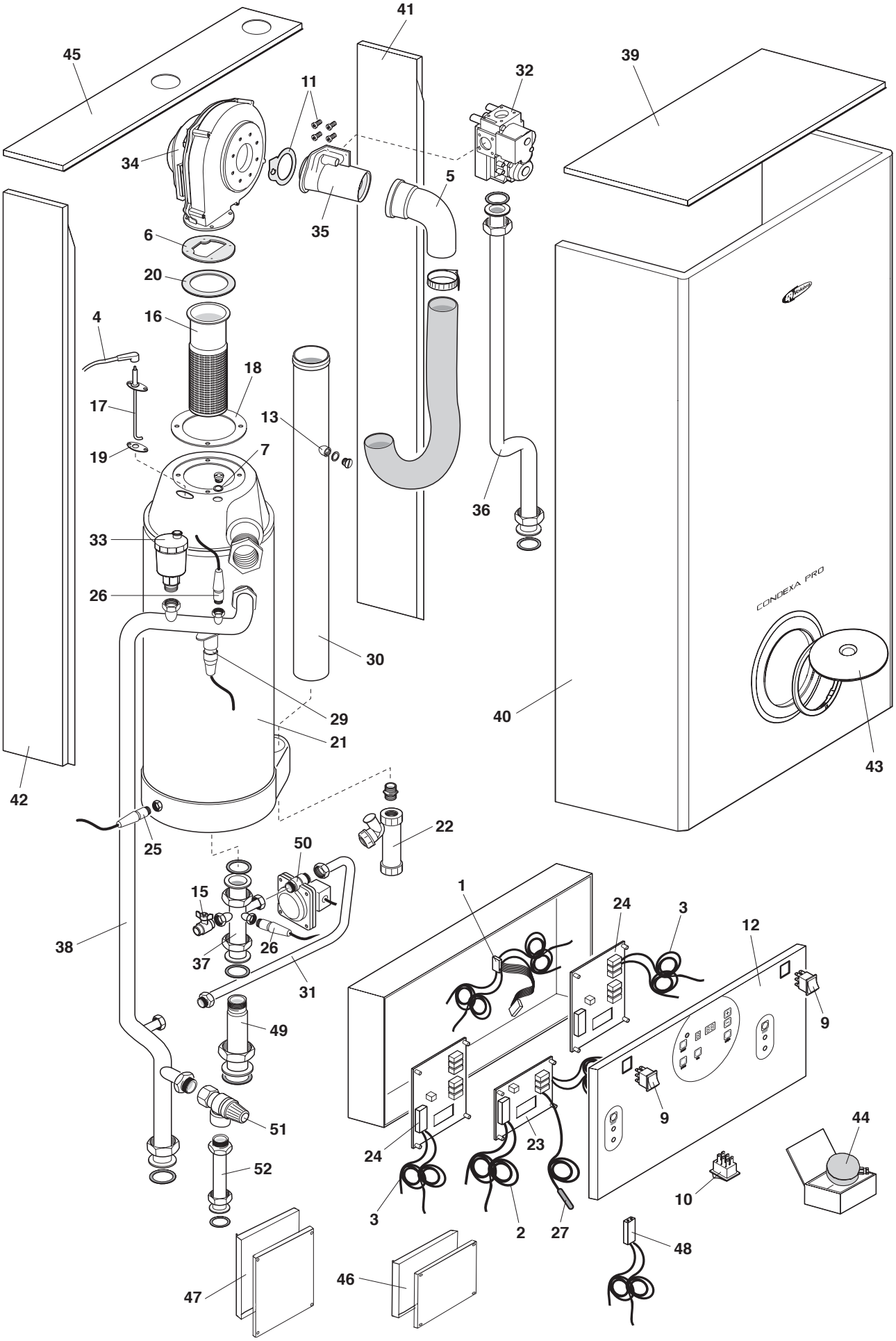
45
41
39
32
11
34
5
35
6
20
4
16
18
17
13
19
7
36
33
26
30
CONDEXA PRO
29
40
21
43
42
22
25
50
15
1
24
3
12
38
26
37
31
9
49
9
51
44
24
23
52
10
3
2
27
48
47
46

POS	DESCRIPTION	626002500 50-37685-12869-4	626002100 50-37685-12867-0	626002101 50-37685-12868-7
1	Main Wiring	R105898	R105898	R105898
2	Master Wiring	R106790	R106790	-
3	Slave Wiring	R105900	R105900	R105900
4	Ignition Cable	R105901	R105901	R105901
5	PP Bend 87°30’ D=50 With 1 Bell	R105902	R105902	R105902
6	Burner Head Silicone Gasket	R105903	R105903	R105903
7	PTFE Teflon Gasket 8x4x2 1/8	R105904	R105904	R105904
9	Green On-Off Switch	R105906	R105906	R105906
10	Round Green On/Off Switch	R105907	R105907	R105907
11	Gasket+Screw Kit for Venturi	R105908	R105908	R105908
12	Instrument Panel with cover	R105973	R105973	R105974
13	Flue Gas Analysis Test Point	R105910	R105910	R105910
15	Boiler Drain Cock	R105912	R105912	R105912
16	Premix Burner	R105913	R105913	R105913
17	Ignition/Detection Electrode	R105914	R105914	R105914
18	Fe Flange For Exchanger Pipe	R105915	R105915	R105915
19	Siliconit Gasket for Ignition Plug	R105916	R105916	R105916
20	Viton Gasket 6000 2mm thick 97x75	R105917	R105917	R105917
21	Condensing Exchanger 50 kW	R105918	R105918	R105918
22	Condensate Drain Trap Quick Fit	R105919	R105919	R105919
23	Pijnenburg Master Board	R107584	R107584	-
24	Pijnenburg Slave Board	R105921	R105921	R105921
25	NTC Flue Gas Probe Ch13-St03-01	R105922	R105922	R105922
26	NTC Immersion Probe 1/8”F	R100030	R100030	R100030
27	Temperature Probe St07 200cm	R105924	R105924	R105924
29	Thermostat 90°-10° Max	R105926	R105926	R105926
30	PP Pipe D=50 L=1000	R105927	R105927	R105927
31	Pressure Switch Connection Pipe	R106253	R106253	R106253
32	Gas Valve 230V	R106250	R106250	R106250
33	Air Vent Valve 1/2”	R105930	R105930	R105930
34	Fan Rg148/1200 Dc	R105931	R105931	R105931
35	Venturi	R105932	R105932	R105932
36	Gas inlet pipe	R105970	R105970	R105970
37	Exchanger inlet pipe	R105971	R105971	R105971
38	Exchanger outlet pipe	R106337	R106337	R106337
39	Top front panel	R105965	R105965	R105965
40	Front panel	R105967	R105967	R105966
41	Right panel	R105968	R105968	R105968
42	Left panel	R105969	R105969	R105969
43	Front panel inspection opening	R105542	R105542	-
44	Outside probe	R104654	R104654	-
45	Top rear panel	R105975	R105975	R105975
46	Master board box	R105973	R105973	R105973
47	Slave board box	R105974	R105974	R105974
48	Serial cables	R106254	R106254	R106254
49	Pipe	R106251	R106251	R106251
50	Differential pressure switch	R106252	R106252	R106252
51	Safety valve 6 bar	R106338	R106338	R106338
52	Safety valve connecting pipe	R106339	R106339	R106339

Rev. 1 (01/2008)

energizing home heating

Vokèra Ltd.
4th Floor, Catherine House, Boundary Way, Hemel Hempstead, Herts, HP2 7RP

Email: enquiries@vokera.co.uk Web: www.vokera.co.uk
Sales, Technical Advice, General Enquiries - Tel: 0870 333 0520 Fax: 01442 281403
After Sales Service - Tel: 0870 333 0220

Vokèra Ireland
West Court, Callan, Co Kilkenny
Tel: 05677 55057 Fax: 05677 55060

Vokèra Ltd. reserve the right to change the specifications without prior notice. Consumers' statutory rights are not affected.

A Riello Group Company

"Vokèra"
supports Benchmark